Work Order ID 68084

Wednesday, April 06, 2011 11:30:12 AM

Item ID: D2873-043 **Accept** **Setup Start** **Stop**

Revision ID:

Item Name: Nut Plate Assembly

Start Date: 4/6/2011 **Start Qty:** 20.00 **Cust Item ID:**

Required Date: 5/18/2011 **Req'd Qty:** 20.00 **Customer:**

Reference:

Run Start **Stop**

Approvals: **Process Plan:** ___ **Date:** 11/04/4 **Tooling:** ___ **Date:** ___

QC: ___ **Date:** ___ **SPC (Y/N):** ___ **Date:** ___

Sequence ID/ Work Center ID	Operation Description	Set Up/ Run Hours	Tool ID	Tool #	Plan Code	Accept Qty	Reject Qty	Reject Number	Insp. Stamp
Draw Nbr	**Revision Nbr**								
D2873	Rev A								
100	BAND SAW	0.00							
Bandsaw	**Memo**	0.00				20	0		
Jeaspa Bandsaw	Cut blanks: 1.000" x 0.375" x 3.700" long								
110	HAAS CNC VERTICAL MACHINING #1	0.00							
HAAS 1	**Memo**	0.00							
HAAS CNC vertical machine #1	Machine as per Folio FA and Dwg D2873 Identify as D2873-3 Dwg Rev A Folio Rev AA								
120	QC2- Inspect parts off machine FAI/FAIB	0.00							
QC	**Memo**	0.00							
Quality Control									

Work Order ID 68084

Wednesday, April 06, 2011 11:30:12 AM

Item ID: D2873-043 **Accept** **Setup Start**

Revision ID: **Stop**

Item Name: Nut Plate Assembly

Start Date: 4/6/2011 **Start Qty:** 20.00 **Cust Item ID:**

Required Date: 5/18/2011 **Req'd Qty:** 20.00 **Customer:**

Reference:

Approvals: **Process Plan:** _____ **Date:** _____ **Tooling:** _____ **Date:** _____ **Run Start**

QC: _____ **Date:** _____ **SPC (Y/N):** _____ **Date:** _____ **Stop**

Sequence ID/ Work Center ID	Operation Description	Set Up/ Run Hours	Tool ID	Tool #	Plan Code	Accept Qty	Reject Qty	Reject Number	Insp. Stamp
130	QC8- Inspect parts - second check	0.00	JL 11/04/19			20			
QC	Memo	0.00							
Quality Control									
140		0.00							
Small Fab	Small Fab					11/04/19	20		
	Memo	0.00							
Small Fab	1-Deburr ☐2- C'sink as per Dwg D2873								
150	QC5- Inspect part completeness to step on W/O	0.00	S 11/04/19			counted 20			
QC	Memo	0.00							
Quality Control									

Work Order ID 68084

Wednesday, April 06, 2011 11:30:12 AM

Item ID: D2873-043 **Accept** **Setup Start**

Revision ID: **Stop**

Item Name: Nut Plate Assembly

Start Date: 4/6/2011 **Start Qty:** 20.00 **Cust Item ID:**

Required Date: 5/18/2011 **Req'd Qty:** 20.00 **Customer:**

Reference:

Run Start

Approvals: **Process Plan:** _____ **Date:** _____ **Tooling:** _____ **Date:** _____

Stop

QC: _____ **Date:** _____ **SPC (Y/N):** _____ **Date:** _____

Sequence ID/ Work Center ID	Operation Description	Set Up/ Run Hours	Tool ID	Tool #	Plan Code	Accept Qty	Reject Qty	Reject Number	Insp. Stamp
160	Chemical Conversion Coat per QSI005 4.1	0.00							
HandFinish	Memo	0.00				20	ϕ		11/04/20
Hand Finishing									
170	QC3- Inspect Part Finish	0.00							
QC	Memo	0.00				20		BR 11-4-20.	
Quality Control									
180		0.00							
Small Fab	Small Fab								
Small Fab	Memo	0.00							
Small Fab	1-Assemble as per Dwg D2873 ☐2-Identify as D2873-043							11/04/25	20

Work Order ID 68084

Wednesday, April 06, 2011 11:30:12 AM

Item ID: D2873-043 **Accept** **Setup Start**

Revision ID: **Stop**

Item Name: Nut Plate Assembly

Start Date: 4/6/2011 **Start Qty:** 20.00 **Cust Item ID:**

Required Date: 5/18/2011 **Req'd Qty:** 20.00 **Customer:**

Reference:

Run Start

Approvals: **Process Plan:** _____ **Date:** _____ **Tooling:** _____ **Date:** _____

Stop

QC: _____ **Date:** _____ **SPC (Y/N):** _____ **Date:** _____

Sequence ID/ Work Center ID	Operation Description	Set Up/ Run Hours	Tool ID	Tool #	Plan Code	Accept Qty	Reject Qty	Reject Number	Insp. Stamp
190 QC Quality Control	QC5- Inspect part completeness to step on W/O **Memo**	0.00 0.00				count x20			
200 Packaging Packaging	Identify as per dwg & Stock Location: x-tube Ass'y **Memo**	0.00 0.00					11	04 28	20
210 QC Quality Control	QC21- Final Inspection - Work Order Release **Memo**	0.00 0.00						11/4/29	

11/4-04-29 (30)

Picklist Print

Wednesday, April 06, 2011 11:30:17 AM

Work Order ID: 68084

Parent Item: D2873-043

Parent Item Name: Nut Plate Assembly

Start Date: 4/6/2011 **Required Date:** 5/18/2011

Start Qty: 20.00 **Required Qty:** 20.00

Comments: IPP A□05.09.13□New issue□KJ/JLM□

Component Item ID/ Item Name	Replacement Item ID	Mfg/ Purch	Bin Item	Primary Location	Last Location	Route Seq ID	Unit of Measure	Qty on Hand	Qty per Kit	Total Qty	Qty Issued	Date Issued	Status
MS21075L5		Purchased	No			100	Each	86.0000	3	60			
Nut Plate													
				Location			**Loc Qty**		**Loc Code**				
				ST303			86						
					116914		86			45			
M6061T6B0.375X01.00 0		Purchased	No			180	f	25.1336	0.3083	6.490526			
6061T6 BAR .375 x 1.00													
				Location			**Loc Qty**		**Loc Code**				
				MAT002			25.1336						
					116963		25.1336			6.49			
MS20426AD4-6		Purchased	No			180	Each	1,396.000	6	120			
Rivet													
				Location			**Loc Qty**		**Loc Code**				
				ST317			1396						
					110139		1396			120			

11/04/25

M117505 (15x)

ok 11/04/14

11/04/25

DART AEROSPACE LTD	Work Order:	68084
Description: Radius Block	Part Number:	D2873-3
Inspection Dwg: D2873 **Rev:** A		Page 1 of 1

FIRST ARTICLE INSPECTION CHECKLIST

[X] First Article [ ] Prototype

Drawing Dimension	Tolerance	Actual Dimension	Accept	Reject	Method of Inspection	Comments
3.50	+/-0.030	3.500	✓		Vern	GA-01
2.000	+/-0.010	2.000	✓		"	"
0.750	+/-0.010	0.751	✓		"	"
1.000	+/-0.010	1.000	✓		"	"
0.250	+/-0.010	0.250	✓		"	"
1.000	+/-0.010	1.000	✓		"	"
2.000	+/-0.010	2.000	✓		"	"
3.000	+/-0.010	3.000	✓		"	"
Ø0.128	+0.005/-0.001	ϕ0.133	✓		"	"
0.359	+/-0.010	0.359	✓		"	"
Ø0.316	+0.006/-0.001	ϕ0.318	✓		"	"
1.000	+/-0.010	1.006	✓		"	"
0.250	+/-0.010	0.252	✓		"	"
0.061	+/-0.010	0.062	✓		"	"
Ø0.230 x 0.125	+0.005/-0.001 x 0.010	ϕ0.231 x 0.125	✓		"	"

Measured by:	G.A	Audited by:	[illegible]	Prototype Approval:	N/A
Date:	11/04/15	Date:	11/04/19	Date:	N/A

Rev	Date	Change		Revised by	Approved
A	06.08.30	New Issue	P/O D2873-043	KJ/JLM	[illegible]

WORK ORDER
NO. 68084
PD 11-04-6

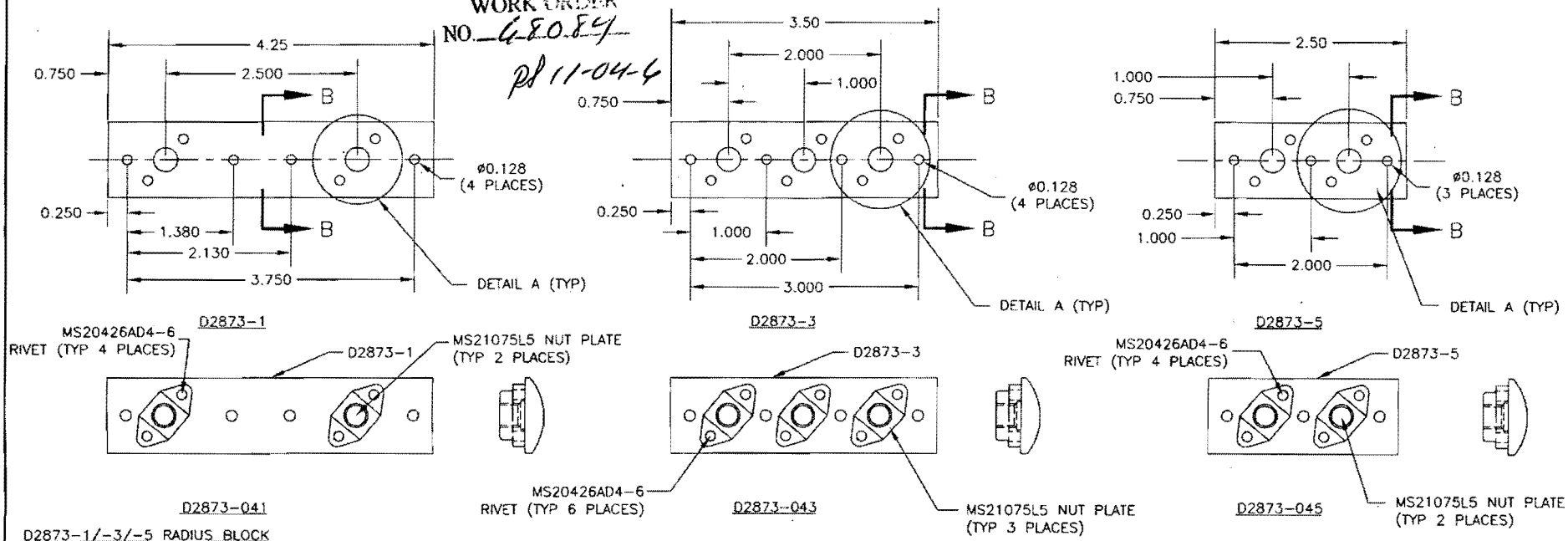

D2873-1/-3/-5 RADIUS BLOCK

1) MATERIAL: 5052-H32/H34 BAR (QQ-A-225/7) (REF. DART SPEC M5052H32B1.000X00.250) OR 6061-T6 BAR (QQ-A-225/8 OR QQ-A-200/8) (REF. DART SPEC M6061T6B1.000X00.250)
2) FINISH: ACID ETCH AND ALODINE PER DART QSI 005 4.1
3) TOLERANCES ARE PER DART QSI 018 UNLESS OTHERWISE NOTED
4) ALL DIMENSIONS ARE INCHES
5) BREAK ALL SHARP EDGES 0.010 TO 0.020
6) ø0.128 PILOT + C'BORE CURVED SIDE ø0.230X0.125 DEEP + C'SINK CURVED SIDE ø0.225 x 100°

D2873-041/-043/-045 NUT PLATE ASSEMBLY

1) INSTALL MS21075L5 NUT PLATE IN ORIENTATION SHOWN USING MS20426AD4-6 RIVETS

D2873-041/-043/-045 NUT PLATE ASSEMBLY PARTS LIST

-041	-043	-045	PART NUMBER	DESCRIPTION
X			D2873-041	NUT PLATE ASSEMBLY
	X		D2873-043	NUT PLATE ASSEMBLY
		X	D2873-045	NUT PLATE ASSEMBLY
1			D2873-1	RADIUS BLOCK
	1		D2873-3	RADIUS BLOCK
		1	D2873-5	RADIUS BLOCK
4	6	4	MS20426AD4-6	RIVET
2	3	2	MS21075L5	NUT PLATE

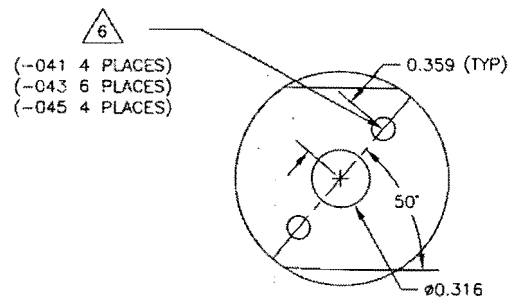

DETAIL A (SCALE 2:5)

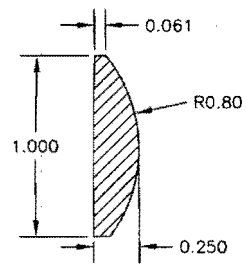

SECTION B-B (SCALE 2:5)

RELEASED
PD 11-04-6

A	05.07.26	NEW ISSUE	
DESIGN PH	DRAWN BY PH	DART	DART AEROSPACE LTD KAPUSKASING, ONTARIO, CANADA
CHECKED DS	APPROVED DS	DRAWING NO. D2873	REV. A SHEET 1 OF 1
DATE 05.07.26		TITLE RADIUS BLOCK	SCALE 4:5